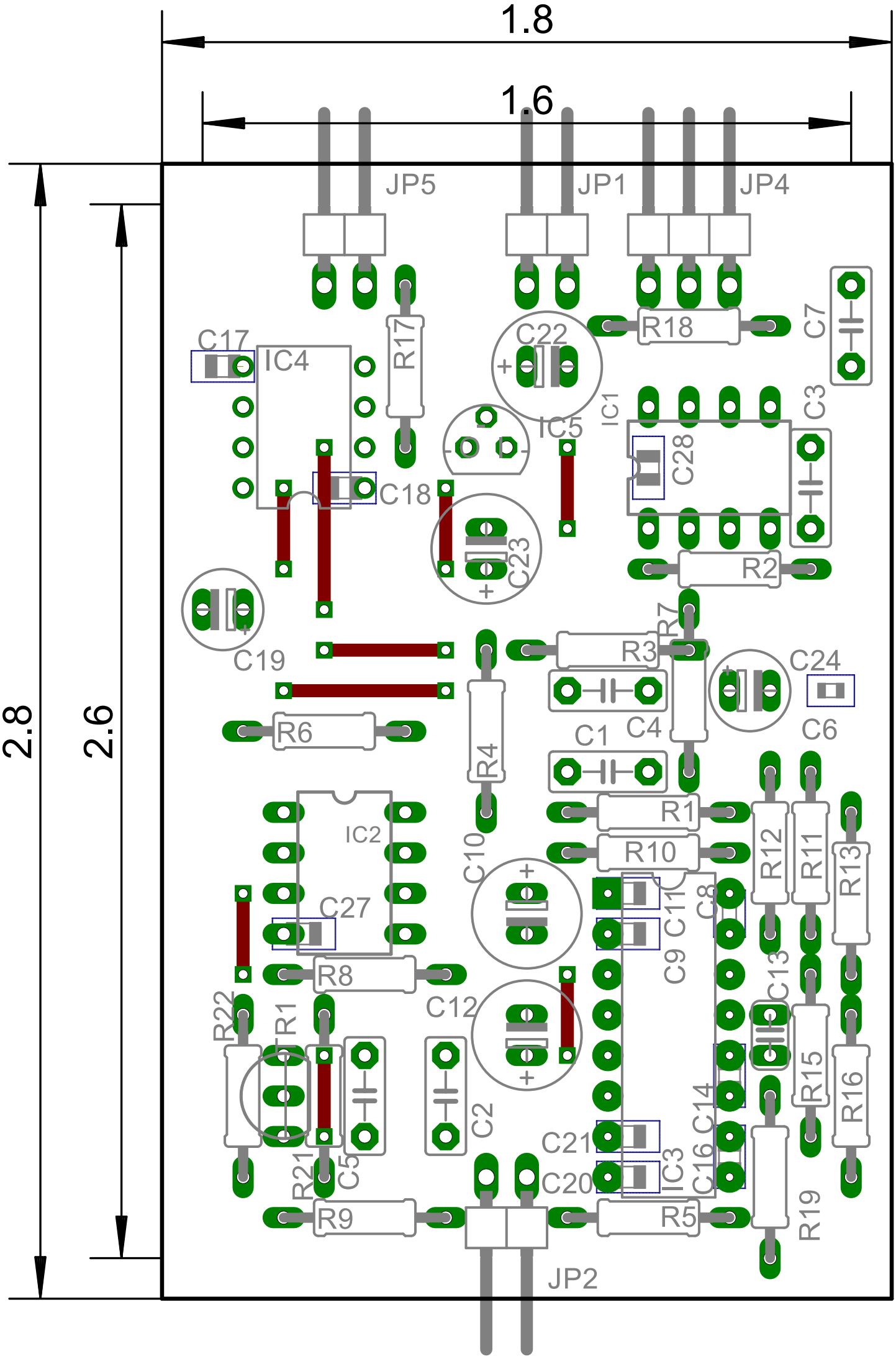
1.8
1.6
2.8
2.6
JP5
JP1
JP4
JP2
C17
IC4
R17
C22
R18
C7
IC1
C3
IC5
C28
C18
C23
R2
C19
R7
R3
C24
C6
R6
C1
C4
R4
R1
IC2
C10
R10
R12
R11
R13
C27
C11
C8
C9
R8
C13
C12
R22
R1
R15
R16
C2
C14
C21
C16
IC3
R21
C5
C20
R9
R5
R19